VERITEK ENG. PVT. LTD.

MODEL VIPS 4401

Current Transformer 4401

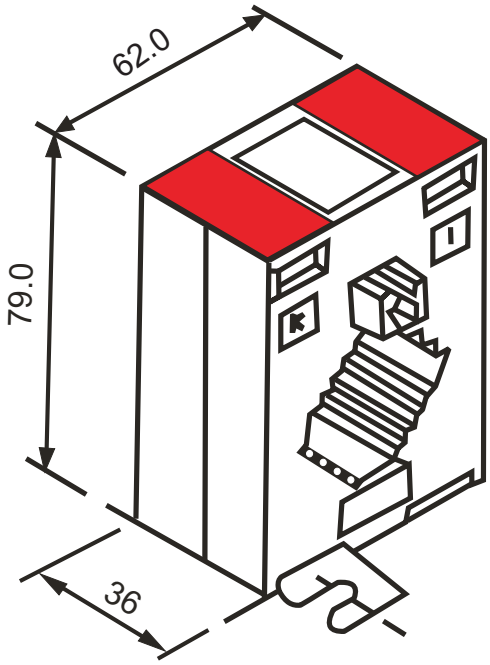

SELECTION CHART

RATIO		2.5 VA	5 VA	7.5 VA
150/5A	CLASS	1	-	-
200/5A	CLASS	-	1	-
250/5A	CLASS	-	1	-
300/5A	CLASS	-	1	-
400/5A	CLASS	-	1	3
500/5A	CLASS	-	-	1
600/5A	CLASS	-	-	1
750/5A	CLASS	-	-	1
800/5A	CLASS	-	-	1

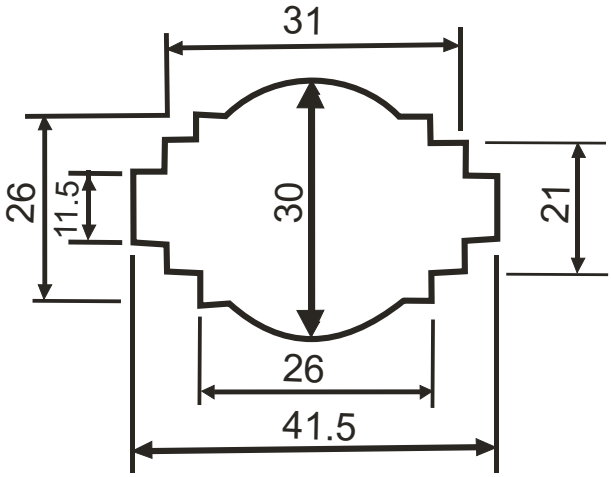

Other Products Manufactured

Panel Meter

Engine PU

CT

Transducer

Temperature

UV/OV/PR

Timer

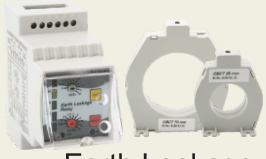
Earth Leakage Relay & CBCT